Open Frame
High Brightness Display

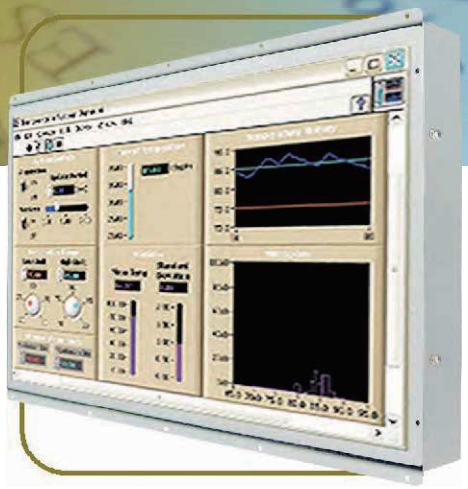

15.6"(16:9)

RoHS COMPLIANT 2011/ 65/ EU

Specifications

Model Name	W15L100-OFA2HB
Panel Size	15.6"
Active Dipsplay Area(mm)	344.2(H)x193.5(V)
Resolution	1366x768
Brightness(cd/m²)	1300 (Typical)
Contrast Ratio	500:1 (Typical)
Viewing Angles(CR>=10)	-85~85(H) ; -80~80(V)
Display Colors	16.7M (8 bits/color)
Standard Input Signal	1 x VGA (D-sub 15) 1 x HDMI (Type-A)
Touch Screen(Optional-1)	Resistive Touch Protective Glass
Touch Interface	USB / RS232
Audio / Speakers (Optional)*	Audio line in (3.5mm) + Speaker x2
OSD	5 Keys: - , + , Power , Esc , Enter
Power Input	12V DC input (2.5ψ) with external AC-DC Adapter (100V~240V)
Power Consumption	25W typical , Normal operation
Operating tempurature	0~50℃
Storage Tempurature	-10~60℃
Accessories	Power AC-DC Adapter(100V~240V) VGA cable (1.8m) HDMI cable (2m)

*Outside dimension and I/O will be different from standard

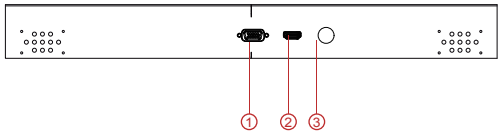

1. VGA
2. HDMI
3. DC Input

I/O Optional	
Optional 1*	1 x VGA (D-sub 15) 1 x HDMI (Type-A) 1 x DVI-D
Optional 2*	1 x VGA (D-sub 15) 1 x DVI-D 1 x S-Video 1 x Composite

Mechanical Drawing

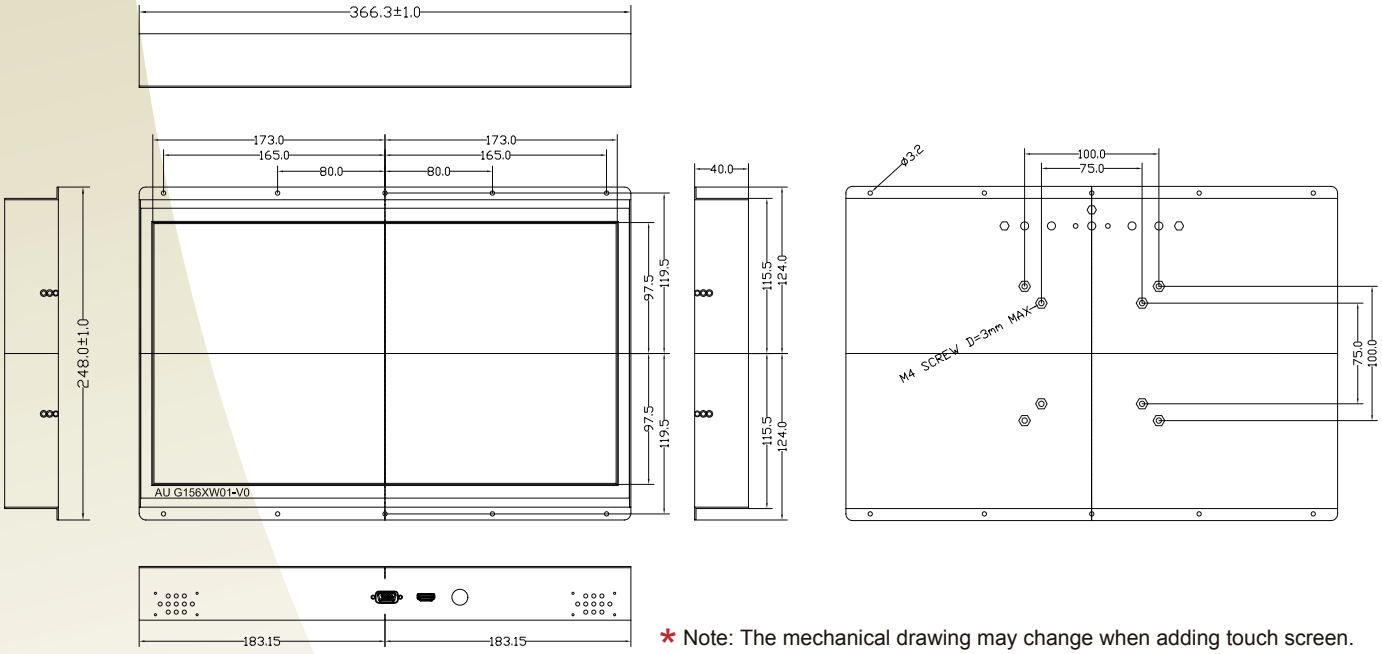

* Note: The mechanical drawing may change when adding touch screen.
Please contact our sales representative if you need further product information.