R17IB7T-RKM1 (Intel® Celeron® Bay Trail-M N2930, 1.83 GHz)

Mechanical Design

Rack Mount

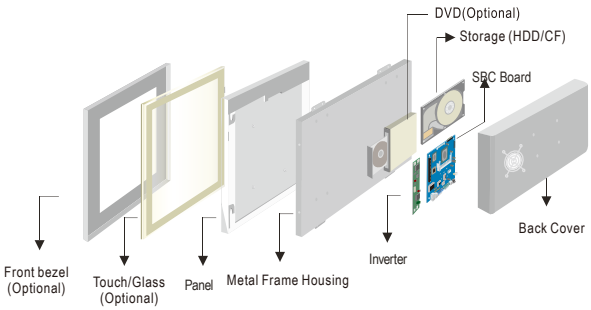

Modularized Construction

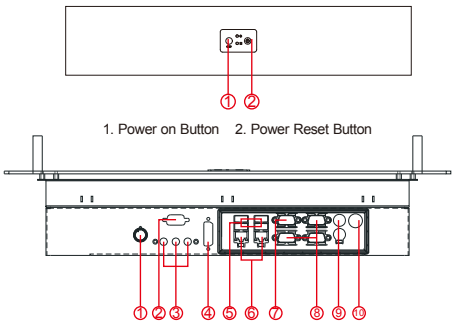

1. Brightness Adjustment Knob
2. RS-232 Conn. (Optional)
3. Audio Jack
4. DVI (Optional)
5. USB
7. LAN
8. VGA
9. RS-232 Conn.
10. PS/2
11. DC-in Power

Fully Integrated I/O

Dimensions

FRONT VIEW

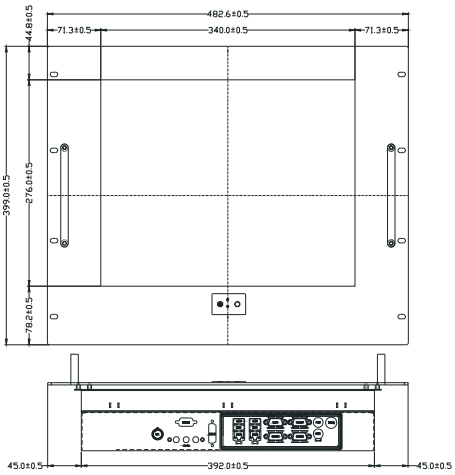

SIDE VIEW

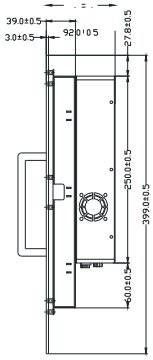

BACK VIEW

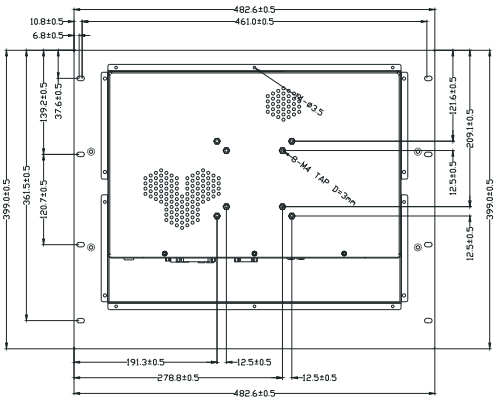

BOTTOM VIEW

* Measurements shown in mm
* Tolerance of all dimensions is shown as follow 0~30 mm ± 0.1 mm, 30~50 mm ± 0.15 mm, 50~120 mm ± 0.2 mm, above 120 mm ± 0.25 mm
* Note: this is a simplified drawing and some components are not marked in detail. Please contact our sales representative if you need further product information.

Specifications

System:

- Processor : Intel® Celeron® Bay Trial-M N2930, 1.83GHz
- Memory Slot : SODIMM DDR3L 1600/1333, max. 8GB
- System Chipset : Intel Atom SoC Integrated
- IDE/SATA : 2 x SATA
- LAN : Intel I210-AT GbE LAN x 2
- Audio Codec : Realtek ALC886 HD Audio Codec

Input / Output :

- Serial Ports : 2 x RS232, 1 x RS232/422/485●
- USB Ports : 1 x USB 3.0, 3 x USB 2.0
- Ketboard/Mouse : 2 x PS/2
- Ethernet : 2 x RJ45-10/100/1000 Mbps
- VGA : 1 x VGA (female)
- Audio : Line-out, Line-in, Mic in

● Default: RS232

Expansion Slot :

- Mini PCIe : 2 x Mini PCIe (1 for WiFi, 1 for 3G Module)
- eDP : 1 x eDP by 2 x 10 DF-13 connector

Power Specifications .

- Power Input : 12V DC (Lockable Power Jack)

Accesso

- External Adapter : 110~240V AC

Panel Spec

- Size/Type : 17" TFT
- Resolutions : 1280x1024
- Brightness : 350cd/m (typ.)
- Contrast Ratio : 1000 : 1 (typ.)
- Viewing Angle : -85~85(H);-80~80(V)
- Max. Colors : 16.7M(6bits+FRC)

Environment Considerations

- Operating Temperature : 0°C to 45°C
- Operating Humidity : 30% to 90% (non-condensing)

OS BSP / Driver Support :

- OS : Windows 10 IoT Enterprise
  Windows 7 Embedded
  Windows 8 Embedded

Order Options :

- Mechanical : Open Frame
  Panel Mount(8mm bezel)
  IP65(8mm bezel)
  Chassis
- Touch : 5 Wires Resistive (Optional)
- Storage : 2.5" HDD/2.5"SSD/mSATA
- RAM : SODIMM DDR3L
  1600/1333, max.8GB
- OS : Windows 10 IoT Enterprise
  Windows 7 Embedded
  Windows 8 Embedded
  (Optional)