P-Cap LCD

P-Cap Panel Mount LCD
Front side IP65

10.4"P-Cap LCD

RoHS COMPLIANT 2011/65/EU

Specifications

Model Name	R10L100-PPP1HB
Panel Size	10.4"
Active Dipsplay Area(mm)	211.2(H)x158.4(V)
Resolution	800x600
Brightness(cd/m2)	1000 (Typical)
Contrast Ratio	400:1 (Typical)
Viewing Angles(CR>=10)	-70~70(H) ; -70~60(V)
Display Colors	262K (6 bits/color)
Standard Input Signal	1 x VGA (D-sub 15) 1 x HDMI (Type-A)
Touch Screen	Projected Capacitive
Touch Interface	USB
Audio / Speakers (Optional)*	Audio line in (3.5mm) + Speaker x2
OSD	5 Keys: - , + , Power , Esc , Enter
Power Input	12V DC input (2.5ψ) with external AC-DC Adapter (100V~240V)
Power Consumption	10W typical , Normal operation
Operating tempurature	0~50℃
Storage Tempurature	-10~60 ℃
Accessories	Power AC-DC Adapter(100V~240V) VGA cable (1.8m) HDMI cable (2m)

*Outside dimension and I/O will be different from standard

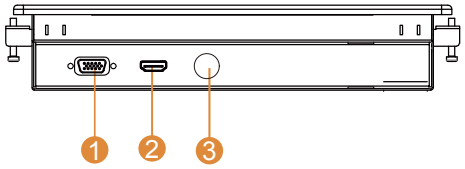

I/O Optional	
Optional 1*	1 x VGA (D-sub 15) 1 x HDMI (Type-A) 1 x DVI-D
Optional 2*	1 x VGA (D-sub 15) 1 x DVI-D 1 x S-Video 1 x Composite

Mechanical Drawing

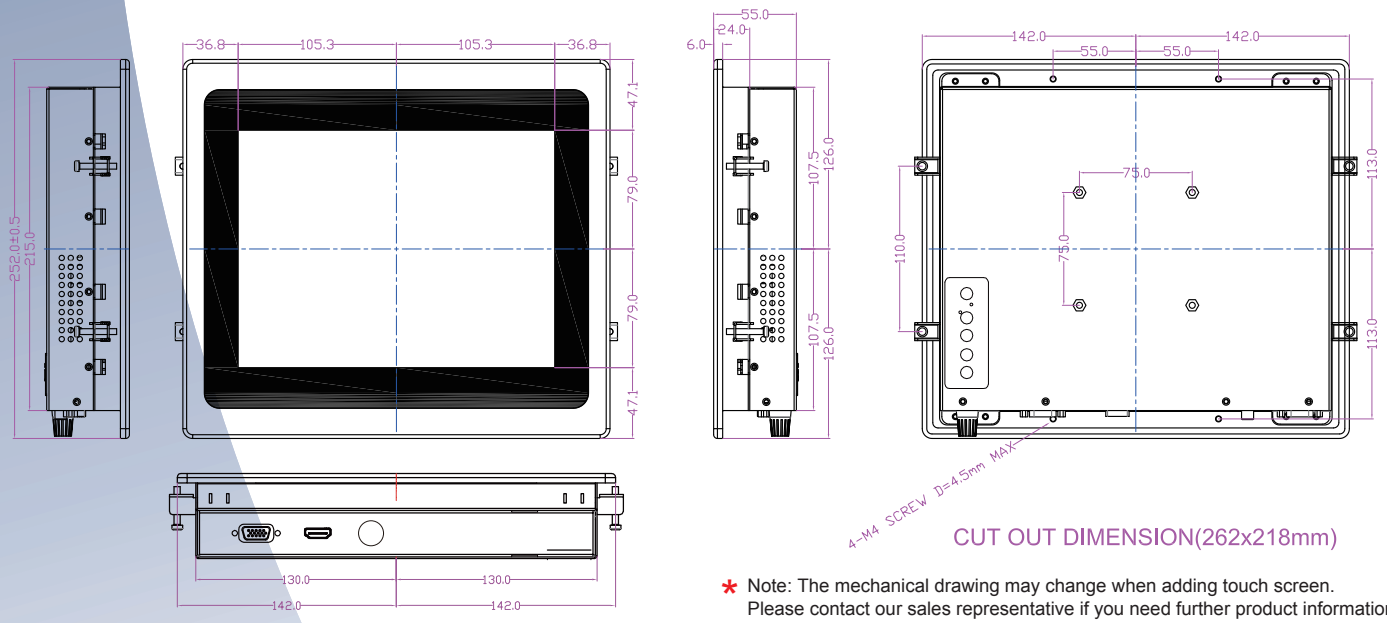

CUT OUT DIMENSION(262x218mm)

* Note: The mechanical drawing may change when adding touch screen.
Please contact our sales representative if you need further product information.